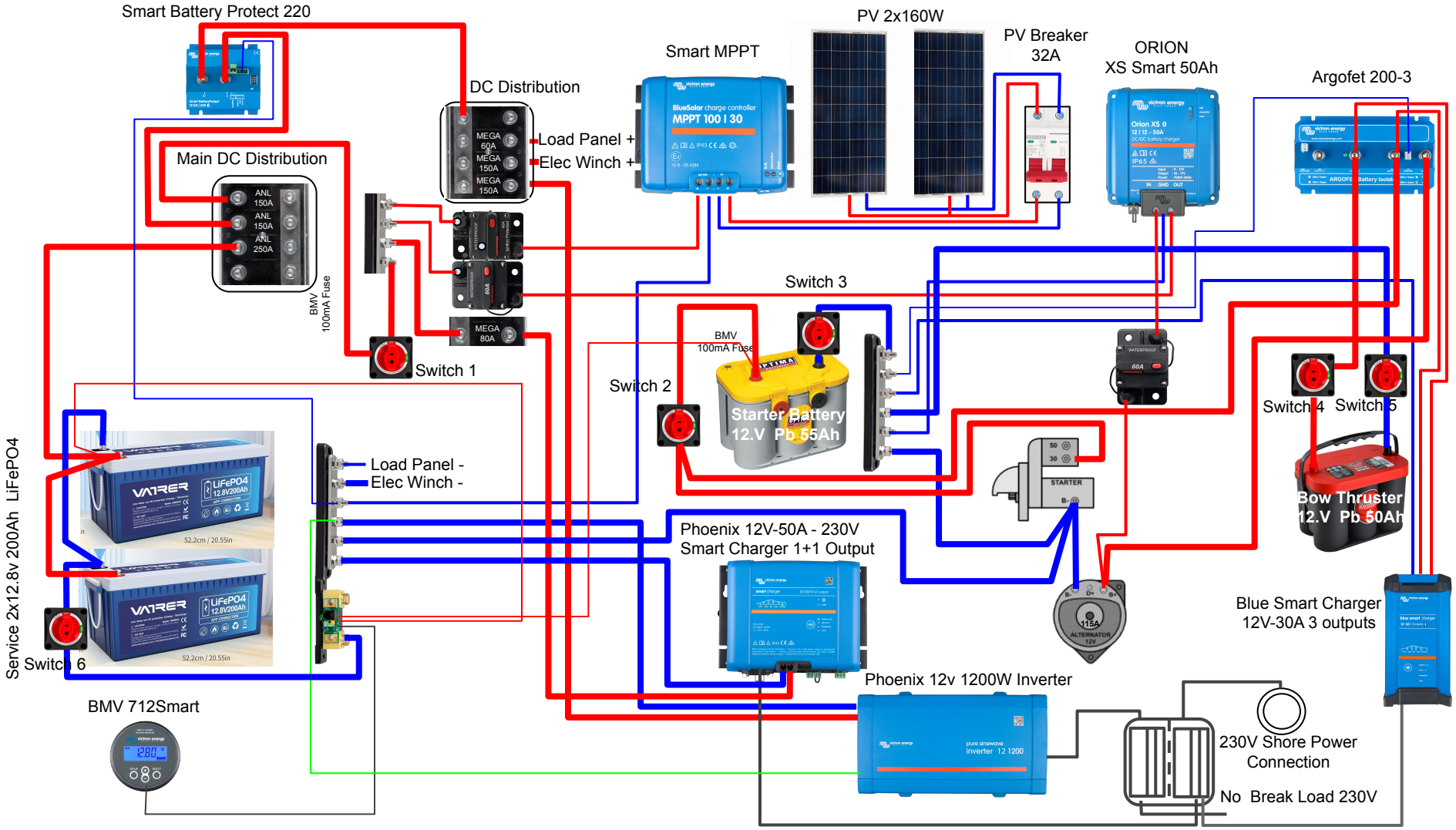
Smart Battery Protect 220
DC Distribution
MEGA 60A
MEGA 150A
MEGA 150A
Load Panel +
Elec Winch +
Smart MPPT
BlueSolar charge controller
MPPT 100 I 30
PV 2x160W
PV Breaker 32A
ORION XS Smart 50Ah
Orion XS 0
12 I 12 - 50A
DC-DC battery charger
IP65
Argofet 200-3
Main DC Distribution
ANL 150A
ANL 150A
ANL 250A
BMV 100mA Fuse
MEGA 80A
Switch 1
Switch 3
BMV 100mA Fuse
Switch 2
Starter Battery
12.V Pb 55Ah
60A
Switch 4
Switch 5
Bow Thruster
12.V Pb 50Ah
STARTER
Service 2x12.8v 200Ah LiFePO4
VATRER
LiFePO4
12.8V200Ah
52.2cm / 20.55in
Load Panel -
Elec Winch -
Switch 6
Phoenix 12V-50A - 230V
Smart Charger 1+1 Output
115A
ALTERNATOR
12V
Blue Smart Charger
12V-30A 3 outputs
Phoenix 12v 1200W Inverter
pure sinewave
inverter 12 1200
BMV 712Smart
230V Shore Power
Connection
No Break Load 230V