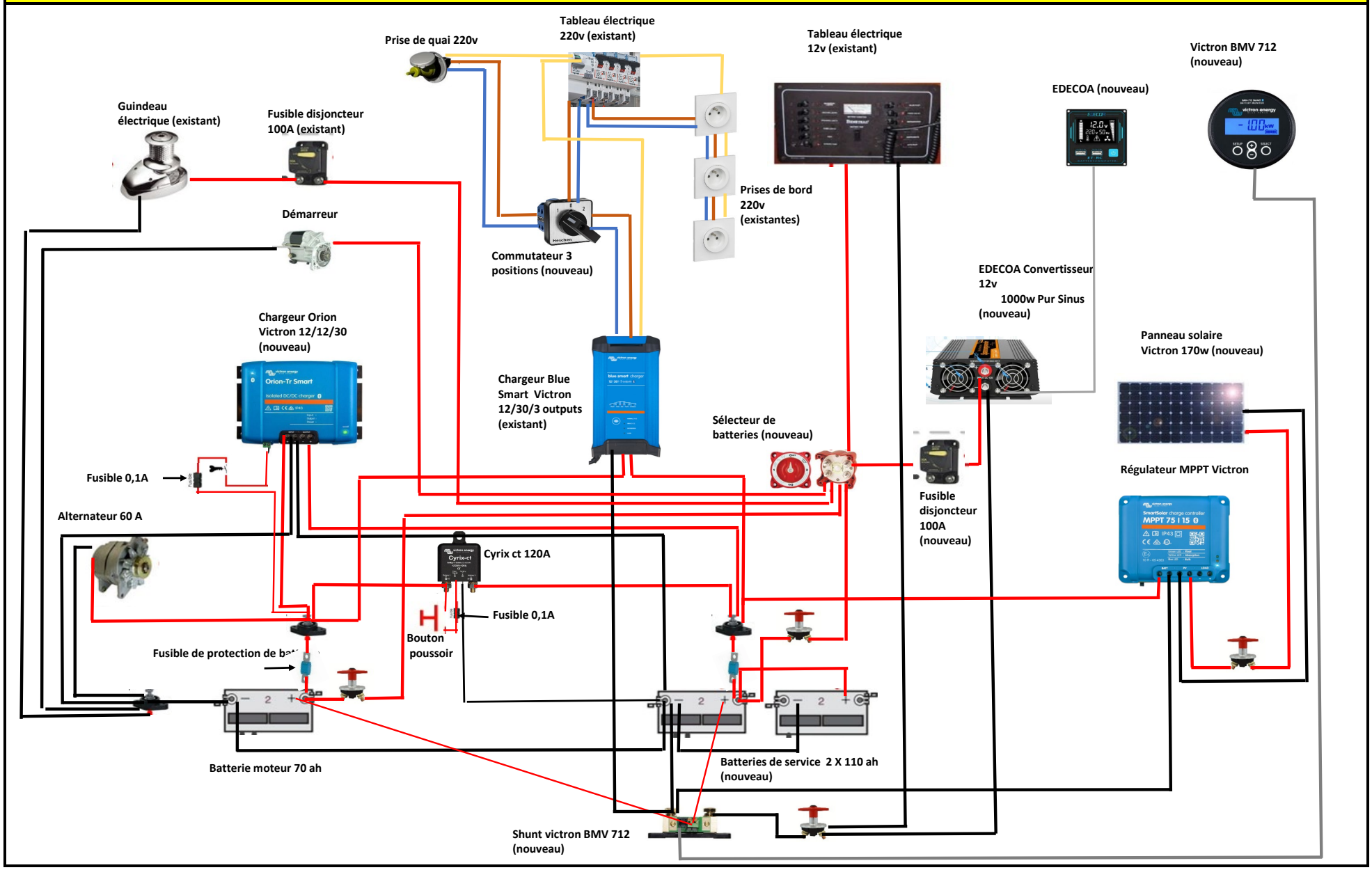SCHEMA ELECTRIQUE 12 V / 220V RESKEBIL