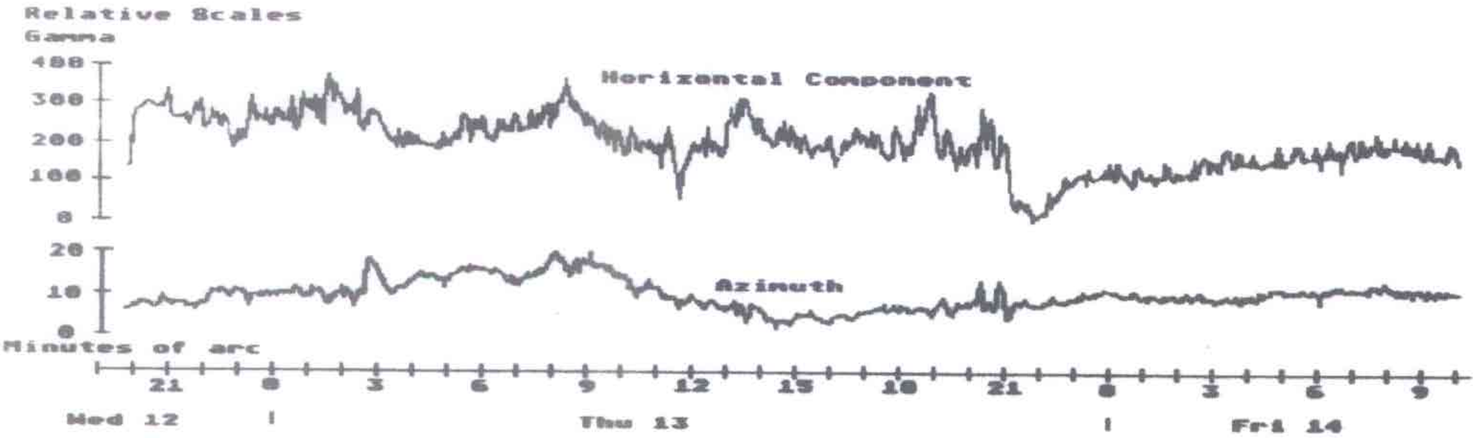

Fluxgate magnetometery

Measuring the direction of the Earth's magnetic field provides the basis of an electronic compass while the strength of the field says much about solar activity, a factor important to HF radio propagation. Richard Noble describes the heart of an instrument which can be used for serious scientific study.

Traditional magnetometers use inductive loops and long wire lines to measure magnetic flux by induced EMF. Such instruments are bulky. Hall effect semiconductors will measure low flux levels although their response tends to be non-linear and temperature dependent. The fluxgate magnetometer, which depends for its action on the detection of saturation occurring in magnetic material, can be made both small and highly accurate. In explaining its operation, it is easier to describe a simpler arrangement than would actually be used in practice.

In its most basic form, it comprises a single straight nickel-iron alloy core carrying two windings. One winding functions as an excitation coil in which current flowing creates a field to magnetise the core in alternate directions. The other acts as a pickup coil producing a voltage proportional to the rate of change of magnetic flux linking it.

At low levels of excitation this structure, outlined in **Fig. 1**, will obviously behave as if it were an inefficient transformer. To convert it to a fluxgate transducer, the excitation is increased so as to force the core into saturation on alternate peaks. This would be undesirable behaviour in a transformer but is the essence of fluxgate operation.

A square voltage waveform is applied to the excitation coil, of sufficient magnitude to saturate the core. During the periods when the core is not saturated, the inductance of the coil causes the current passing through it to change linearly from one saturation state to the other. As the core reaches saturation the inductance falls to a low value and the current rises rapidly to a limit set by the DC resistance of the coil forcing the core well into saturation. The waveform of this current is shown in **Fig. 2** which also serves as an illustration of the magnetic field produced by the coil, since this must be directly proportional to the current.

The induction in the core is magnified by the high permeability, except in the saturation regions where the result can be seen to be a trapezoidal induction waveform (**Fig. 3**). The voltage induced in the pickup coil by this waveform is directly proportional to the rate of change of magnetic induction.

During the periods of saturation, there is no change and no signal voltage, but during the linearly changing regions there is a constant voltage output of appropriate polarity, as shown in **Fig. 4**.

All of the above assumes that the only influence on the core is the magnetic field produced by the excitation coil. If this is not the case and the core is affected by an additional external field, a small change takes place in the output. The component of exter-

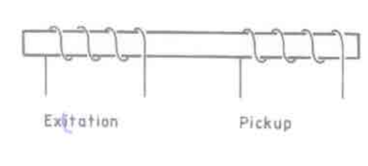

Fig. 1

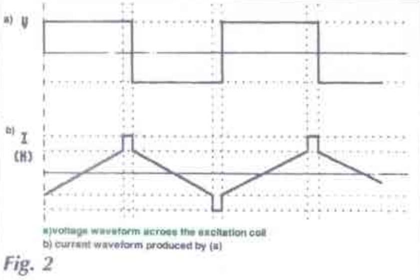

a)voltage waveform across the excitation coil
b) current waveform produced by (a)

Fig. 2

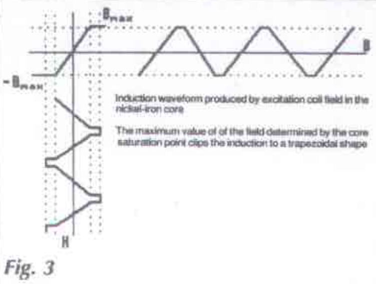

Induction waveform produced by excitation coil field in the nickel-iron core

The maximum value of of the field determined by the core saturation point clips the induction to a trapezoidal shape

Fig. 3

The study of propagation is one of the important aspects of radio comms activity. The ability to forecast ionospheric conditions is related to solar activity. A magnetometer, detecting changes in the magnetic fields arising from charged particles deflected around the earth, measures the effects of corpuscular and non-corpuscular radiation emanated from the sun during solar flares and other events.

Non-corpuscular radiation is in the form of high energy X rays which, assuming that the earth is in the path of the rays, will reach the earth in fifteen minutes. This radiation may increase the depth of the 'D' layer due to ionisation and produce the all too well known Dellinger fade out when long-distance HF communication ceases abruptly.

Corpuscular or particulate radiation appears in the form of protons and neutrons which take longer to reach the earth's upper atmosphere than the higher energy radiations. These nuclear particles arrive at the F1 and F2 layers approximately 48 hours following a solar event and produce ionisation by colliding with gaseous molecules and cosmic particles. This explains why so few protons are detectable at the earth's surface except after very major events.

The increased ionisation along the earth's lines of magnetic force make them more conductive and leads to an increased current flow with consequent rise in magnetic flux levels. It is under these conditions that the magnetometer is useful in detecting the fluctuations in the magnetic fields.

In terms of radio propagation, varying electrical conductance in the ionosphere influences either the absorbency or reflectance of radio emissions. A knowledge of the ionospheric status will often suggest which bands will be more productive. It is interesting to note that a Dellinger fade out is often followed by a magnetic field change around 48 hours later.

Many articles have appeared in the amateur radio press and elsewhere describing the many aspects of propagation and giving more detailed information on the theory of and effects of solar radiation on communications systems. This brief and simplified introduction has been included for completeness, and hopefully to show that the examination of the earth's magnetosphere in relation to propagation is not a difficult project to undertake, the equipment is easy to build and has the advantage of being a both interesting and useful addition to your capability. David **Lomax GW0FXA**

The trace on the left hand page shows the disturbances caused to the the earth's magnetic field by a solar storm occurring between June 12 and 14, 1991. The measurements were made with the system described in this article.

nal field which is in line with the core axis either aids or opposes the excitation field in its alternating polarity phases. When it aids the excitation field, the entry into saturation occurs slightly earlier and the departure from saturation occurs slightly later than would be the case. The opposite effect arises when the external field opposes the excitation field. For clarity, this is illustrated in very exaggerated form in **Fig. 5**. The amount of advance and delay in the waveform corner is proportional to the size of the external field.

In this way the desired objective has been achieved in the form of a signal variation which is a function of the external magnetic field strength. It remains to exploit this. Since a perfectly symmetric waveform does not contain even harmonics and an asymmetric one does, a possible technique would be to isolate the even harmonics as the usable signal.

However the presence of very large fundamental and odd harmonic components in the output makes the isolation of the small even harmonics a very daunting task.

A Better Technique

Fortunately there is a very effective simple solution in the form of two parallel cores with opposing excitation windings and a single overwound pickup coil (**Fig. 6**). The inductions in the two cores cancel out precisely when the cores are placed in a zero external field; an external field causes asymmetric pulses of amplitude and position dependent on the polarity and strength of the external field. The resultant waveforms are shown in **Fig. 7**.

In this way, the trick of using two cores has performed the seemingly impossible task of isolating the tiny wanted signal from the comparatively huge unwanted one. If the pulses marked with arrows in Fig. 7 are isolated from the others and applied to an appropriate low pass filter, the output is a DC or slowly varying voltage whose magnitude and polarity model the external field. It would appear that isolating the set of pulses not marked with arrows would work equally well and, in fact, combining both in a suitable way could double the sensitivity. For low gain systems such as fluxgate compasses or short range metal detectors this is true, but for high sensitivity application such as the magnetometer described here, there are good reasons to avoid this approach.

A Practical Solution

All of the foregoing assumes perfectly matching cores and windings and in practice is not easily achieved without individual and fiddling adjustment. The problems associated with the need for perfect matching can be avoided by one further design change.

The long straight cores are abandoned. They are instead bent into semicircles and joined together at their ends to form a solid circular toroid. The two opposing excitation coils merge into a simple, single, full toroidal winding. The pickup coil remains a single winding over the toroid (**Fig. 8**). By these modifications the sought-after simplicity is achieved, coupled with the virtual elimination of all high-level signals. As an additional benefit, the closed magnetic circuit of a toroidal core greatly reduces the drive requirements to produce saturation levels, simplifying the circuitry needed by the system.

It may be felt that replacing two straight cores with a ring structure is too drastic a change to gloss over, but the mechanism is not too different in the two cases. **Figure 9** represents the way in which the lines of force are concentrated from the immediate vicinity and makes plausible the idea that an overwound coil would not see much difference in the flux changes it experiences from either system.

An additional advantage of the ring core is that it will accept more than one overwound pickup coil and they can have different orientations to the external magnetic field. For example while the coil orientation shown in **Fig.10a** produces the largest output, that **10b** links none of the changing flux and has a null output. Angles between these produce an output which varies as the cosine of the angle, leading to the familiar figure-of-eight polar diagram for directional sensitivity. This is the characteristic which is exploited in the design of a fluxgate compass.

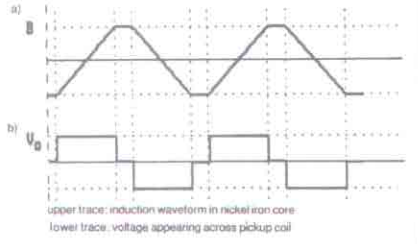

Fig. 4

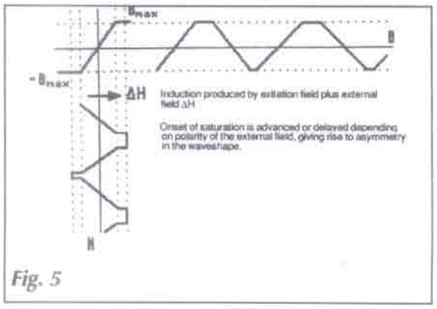

Fig. 5

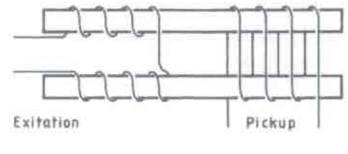

Fig. 6

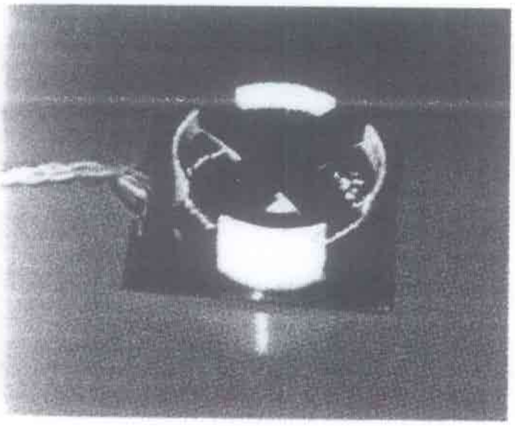

The flux gate transducer outlined in this article can be used at the heart of a scientific magnetometer or highly accurate electronic compass

The double coil structure is also of interest in the observation of the earth's magnetic field. By making a magnetometer with two pickup coils at right angles and orienting it to give the maximum and null outputs referred to, the magnitude variations and angular variations are effectively separated. In the maximum output direction the polar diagram is almost insensitive to small angular variations and the signal represents earth's field magnitude changes. In the null output direction the signal changes are almost solely due to angular movement of the earth's field and over the small range involved are linearly proportional to angle. To do a complete job would of course require two rings and three pickup coils.

If the toroid is inclined at the earth's field dip angle for the locality, (about 67° in the UK) and the pickup coil is positioned for a null output, the system should have maximum sensitivity and there is no requirement for an offset null arrangement prior to large amplification to reveal the fluctuations. If the coil is positioned for maximum output an offset adjustment equal to the mean magnitude of the field is required, but need be no more complicated than an offset bias to the following amplifier input.

A more usual setup would probably be to fix the core in a horizontal position, aligned so that one pickup coil responds to the maximum horizontal component of the earth's field, in which case the other would respond to the variations in declination or angular change in direction. This corresponds to two of the standard measurements made by recording stations and should provide adequate indications for radiocomms prediction.

Instrument design

A simple RC oscillator supplies trigger pulses to a frequency divider formed from two D-type bistables. Complementary outputs from the lower frequency bistable are used to operate voltage switches which connect the full supply voltage across the excitation coil in alternate directions thus providing the square voltage waveform. A small resistor is connected in series with the coil to limit the current during core saturation. The frequency is chosen to make sure that the core reaches saturation at each alternation, but does not spend any more than a short time in this condition so as to maximise the final output signal; the circuit should produce as many saturation signals as possible.

The pickup coil signals connect to analogue switches controlled by the first (and higher frequency) bistable in the driving divider chain, in order to isolate only those signals which coincide with the saturation waveform transitions.

The signals from the two switches are fed to two operational amplifiers configured as simple RC low-pass filter/integrators. A second pair of amplifiers provide additional outputs at higher sensitivity. The first stages are fitted with input offset adjustments just large enough to cancel the largest field likely to be encountered, namely the total inclined component in the middle latitudes. They also have a gain setting which will allow a field of this magnitude not to overload the output of the stage. This is useful in setting the zero field output correctly.

Fields in the range of interest are usually measured in gamma, one gauss being 100,000 gamma. The total component of the earth's magnetic field in the UK is around 47 000 gamma inclined at around 67° to the horizontal. The particular core and winding arrangement used in the design has an intrinsic sensitivity of about 12mV/gauss or

Start with a piece of plastic drainpipe, 110mm outside diameter and approximately 85mm long. Scribe or draw a line along its length, parallel to its axis. Then drill 1mm diameter holes along this line, starting from one end, at the following distance from that end. (in mm)

8,10,19,21,63,65,74,76.

Make a line all round the circumference at the 10mm and 65mm positions. Using 0.2mm enamelled wire, feed the end from the outside through the 10mm position and back through the 8mm position, pulling through a sufficient length to make connection to later. This secures one end of the coil.

Now, following the 10mm line marked earlier, wind the wire carefully around the tube until you have 24 close-wound turns. This should bring you close to the hole at the 19mm position. Leaving a short extra length for connection purposes, cut the wire and feed the end in through the 19mm position and back out through the 21mm position. Gently pull the end to tighten and secure it.

Repeat the entire process, going in through the 63mm position, out at 65mm and after 24 turns, in at 74mm and out at 76mm. Trim, scrape off the enamel and solder together the wires which exit at 21mm and 63mm, effectively putting the two coils in series aiding configuration. Trim the outside ends which exit at 8mm and 76mm and solder two lengths of heavier gauge cable to them for connection purposes. These can also be secured in a similar manner if some larger holes are drilled in the tube.

With the aid of two small pieces of quadrant moulding the tube can be glued down to a wooden base plate and the job is finished.

One further tip. Close-winding large coils like this one can be very tricky. A layer of double sided sticky tape wound on the tube first makes the winding easy, as the wire stays in place as it is wound.

Fig. 7. The filter output is derived from the sum of the core contributions to the pickup coil output

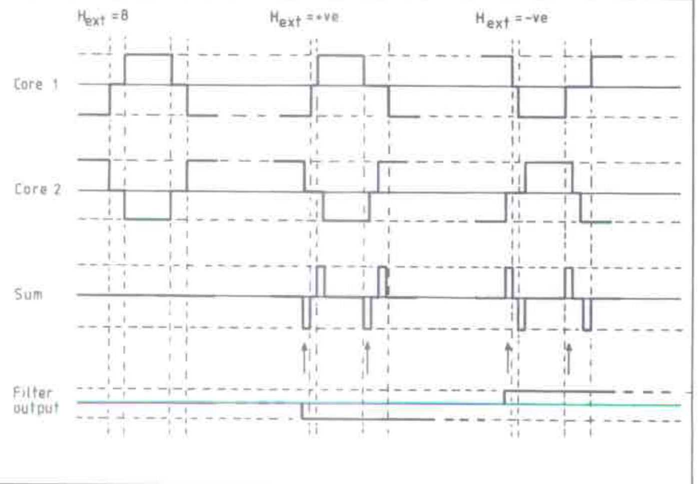

0.12μV/gamma. A gain of 400 in the first amplifier/filter will then produce an output of almost two and a half volts from the total earth's field vector, avoiding overload and permitting a peak-to-peak measurement by rotating the core.

Calibration

The core is aligned with one coil picking up the north-south field and inclined at roughly 67° to the horizontal and adjusted so as to produce the largest positive output from the amplifier. It is then rotated through approximately 180 degrees to find the largest negative output. This process is repeated, while the zero offset is adjusted, until the positive and negative readings have the same magnitude. The amplifier will then have been adjusted so that zero field corresponds to zero output, the first step in achieving calibration.

The next is to calibrate the gains, using a pair of Helmholtz coils. These are not the expensive-looking, beautifully crafted works of art found in old school laboratories. With a sensitive magnetometer all that is needed is a few turns of enamelled wire reasonably carefully wound onto a piece of plastic drainpipe. The requirement is a pair of close-wound coils, mounted on the same axis and separated by a mean distance equal to their mean radius, as shown in **Fig. 12**. The result is a fairly large volume between the coils of almost uniform field strength given by:

where r is the mean radius of the coils in

$$B = \frac{9.1 \times 10^{-3} \times N \times I}{r}$$

meters, N is the number of turns in each coil and I is the current flowing in the coil in amperes.

Using a 110mm diameter piece of plastic tubing as a former, a pair of coils wound with 24 turns/coil of 0.2mm wire gave a coil constant of 3.95 gauss/ampere. The calibration is carried out by mounting the magnetometer core centrally in the coils and adjusting the peak-to-peak output while reversing the coil current, set to a constant value appropriate to the range being calibrated. This would range from about 125mA to match the earth's field to 0.75 mA to set the most sensitive range.

The first stage amplifier has a gain of only 400 giving a sensitivity near 20000 gamma/volt. This could show a severe magnetic storm but a higher sensitivity is desirable for serious observation. A second stage amplifier provides a gain of around 200, increasing the instrument sensitivity to 100 gamma/volt. This is high enough to permit observation of the diurnal variation. At this gain the noise level of the instrument can be seen in quiet periods to be approximately 10 gamma - 15 gamma over a bandwidth of the order of 0.3Hz, reasonable enough for serious studies.

If the instrument is only to be an indicator of magnetic activity then calibration is not really necessary. However a small scattering of calibrated stations could provide an interesting and potentially significant source of scientific data on radio propagation. Quantitative information, even of limited accuracy is often useful if enough people collect it.

Sensor design

The core used in the magnetic sensor is made by Telcon Metals of Crawley and consists of a toroid wound from a flat tape, one thousandth of an inch thick HCR alloy. This metal was specially developed for use in magnetic control systems and amplifiers and has a remarkably rectangular hysteresis loop in which the remanent flux is only 2.6% less than the saturation flux.

As supplied the core is protected by being enclosure in a toroidal shaped hollow plastic case. This makes the winding simple since the wire can be applied directly over the case.

The only toroidal wound coil is the excitation coil and it should be made up using 0.5mm diameter enamelled wire. Start with a length of about seven metres of wire, precisely half of which should be spooled onto a shuttle thin enough to pass through the centre of the toroid. The other half should be neatly coiled and taped for the moment. Temporarily secure the centre of the length to the core with a piece of tape and begin winding by passing the shuttle through the core centre repeatedly.

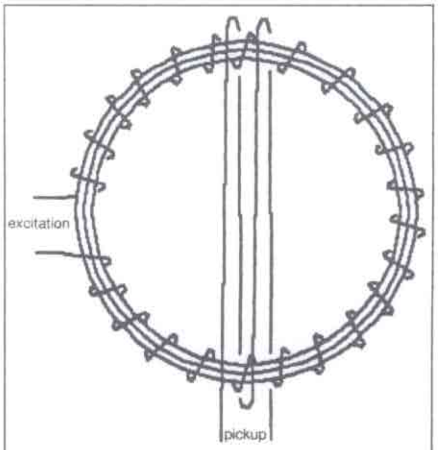

Fig. 8: the toroidal core winding system. The finished transducer includes a second pickup coil at right angles to the first.

As winding progresses, unloop from the shuttle just enough wire at each stage to make handling as reasonable as possible, taking care to avoid kinking the wire. Keep the turns close wound on the internal diameter and reasonably evenly spaced on the outside. This is easily said and less easily done, but it is not critical to the final working. Be careful however to avoid overlapping turns.

When the winding extends around approximately half of the core cut off the end, leaving a few inches of spare wire and tape the wire down temporarily. Repeat the whole exercise with the other half of the original length of wire until the entire core is filled. Secure the wire ends by twisting them together for a short distance to prevent the turns trying to unwind themselves. The total number of turns need not be exact but will be around 170.

The next stage is to find a piece of plastic or card tube which will just slide snugly over the wound coil to provide the former for the pickup coils. It is possible to make up

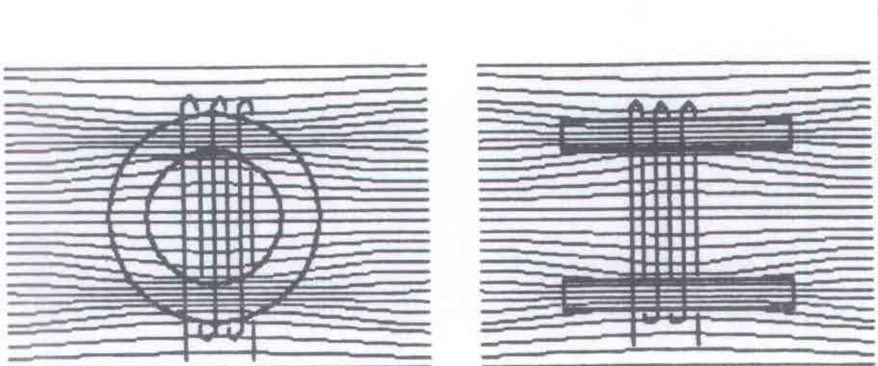

Fig. 9: a toroidal core tends to concentrate the magnetic field tangentially producing the same sensitivity pattern as a pair of bar cores.

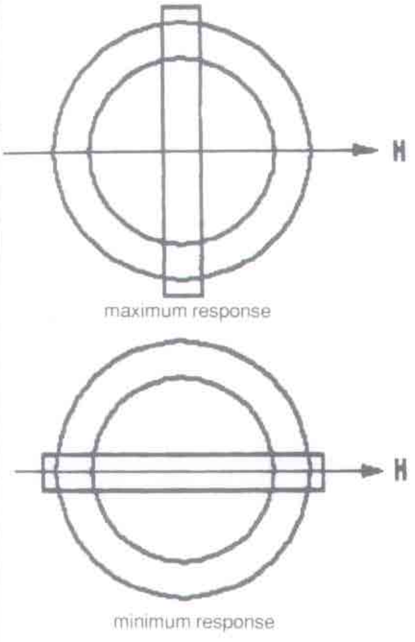

Fig. 10: the toroid exhibits greatest sensitivity at right angles to the pickup coil

a tube by winding and gluing layers of brown paper round a suitable former.

Shallow slots should be cut or filed into the top and bottom of the tube as shown in **Fig. 13**. These are to facilitate the winding of the pickup coils. Next wind some tape through the slots and around the core to provide a base for the pickup windings. The coils themselves should consist of 500 turns of 0.2mm enamelled wire scramble wound as neatly as possible over the core, the second winding crossing over the top of the first at right angles.

The whole assembly can then be given several coats of varnish to help hold the windings in place and glued down to asquare mounting board, etc. The ends of the coil should be soldered to the termination strips to allow for the later attachment of heavier gauge connecting cable.

Electronic Design

The detailed electronic circuit is shown in **Fig. 14** and consists of three basic sections, a power driver for the excitation coil and two identical sense amplifiers.

The driver section starts with an RC oscillator made from two 4011gates wired as inverters. The component values are chosen to give a frequency of 720Hz. The output is fed to a two stage frequency divider formed from the D-type 4013 bistables, producing a final output square wave at 180Hz in both normal and inverted phases. These two signals are connected to two pairs of complementary emitter followers in bridge connection for core driving. The excitation winding is connected in series with a small current-limiting resistor.

The current in the coil rises rapidly to a value limited by the series resistor when the core reaches saturation. At this point the voltage drop across the emitter followers also increases causing a sudden small reduction in the available square wave voltage, which persists until the signal reverses. This effect causes the pickup coil pulses associated with entry to saturation to be noisy and undesirable for use in the final measurement system. The reason for this is that as the core begins to saturate, the voltage available for saturation falls, tending to slow down the approach to saturation. This makes the transitions less well defined and subject to jitter in rather the same way as a multivibrator will jitter if the initial approach to transistor turn-on is not rapid.

The signals generated in the pickup coils are not neat rectangular pulses although their amplitudes vary with the external field. The lack of perfect balance and coil symmetry also allows some of the fundamental switching frequency to leak through. However, the key fact remains true in that the area under the pulses is proportional to the external magnetic field, after discounting the small offset caused by the fundamental breakthrough. The waveforms look something like **Fig. 15**.

The pickup coil in each amplifier is loaded by a 1kΩ resistor and applied to one section of an quad analogue switch. The output is loaded by a 10kΩ resistor to avoid the following circuitry seeing a high impedance when the switch is open, thus becoming susceptible to interference or hum pickup. The control signal for the switch is derived from the first divider bistable (at twice the core switching frequency) by differentiating the square wave and clipping off the negative pulses with a diode. This results in short positive pulses coincident with the core switching transitions to select the desired pickup coil signals.

The signals from the switch go to an inverting DC coupled operational amplifier with lowpass filter characteristics through the addition of a capacitor in parallel with the feedback resistor. The variable input resistor allows for gain calibration.

The corner frequency of the filter is about 0.3Hz. The signal then goes to a second

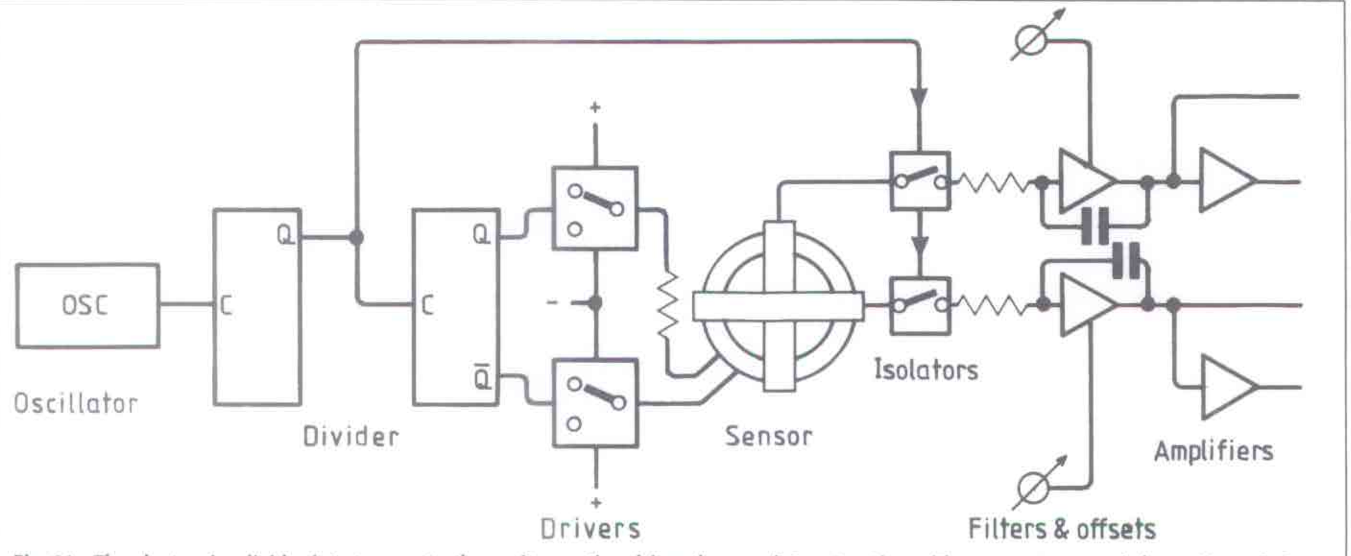

Fig. 11: The electronics divides into two parts: the exciter section drives the core into saturation with a current ramp of alternating polarity while the measurement section integrates the pickup coil pulses caused by the action of a static magnetic field on the core.

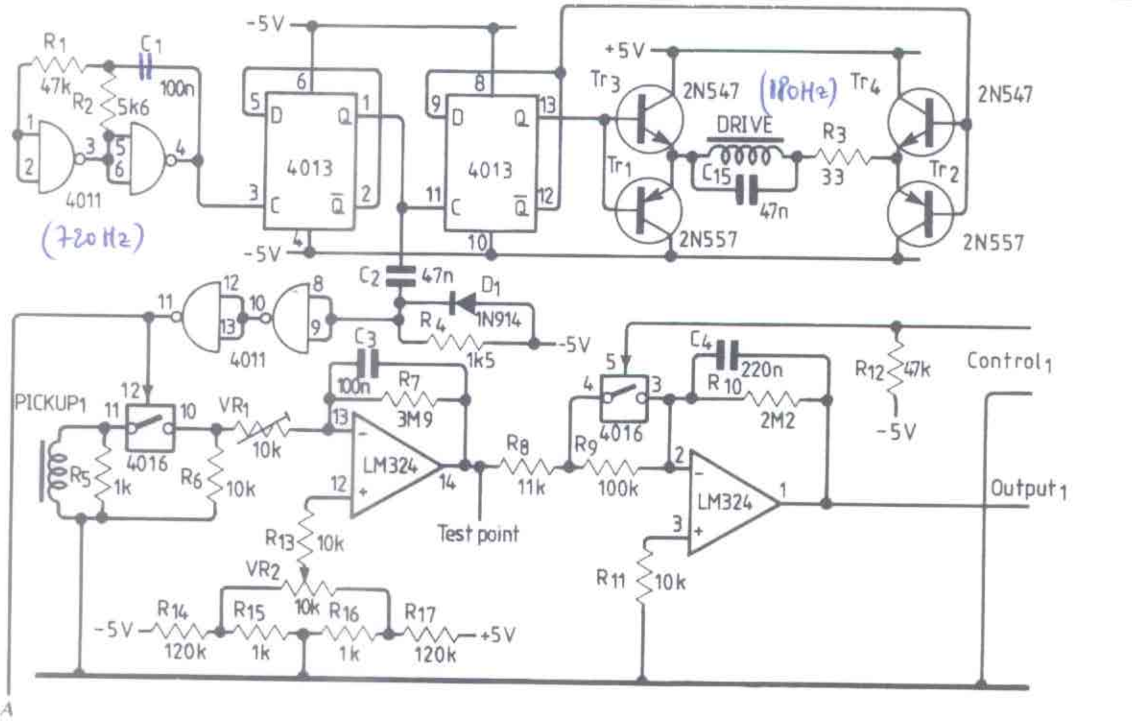

Fig. 14: complete circuit diagram in three parts. Note the bridge driver for the exciter coil allied to the synchronous rectifier downstream of the pickup coil

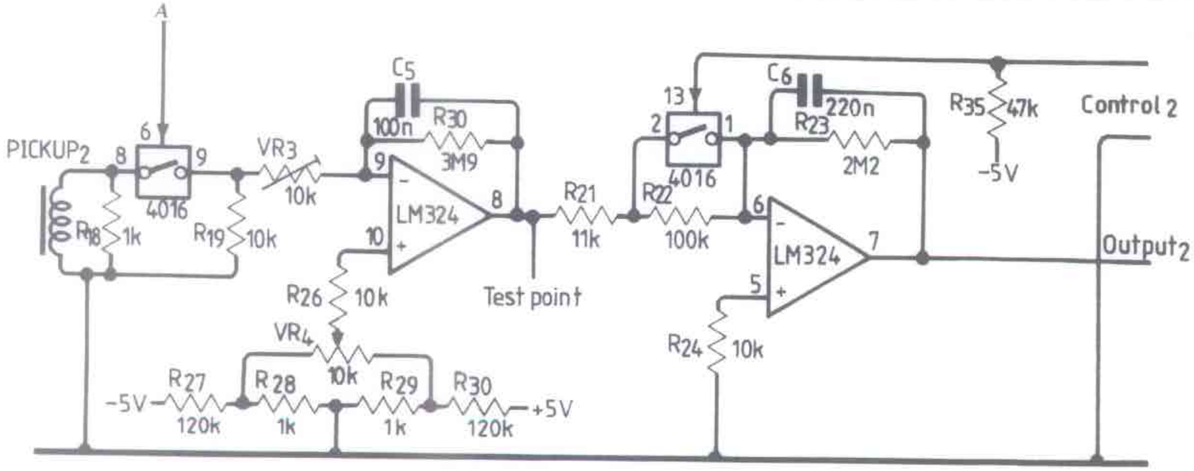

Second measurement channel mirroring the bottom half of the upper diagram

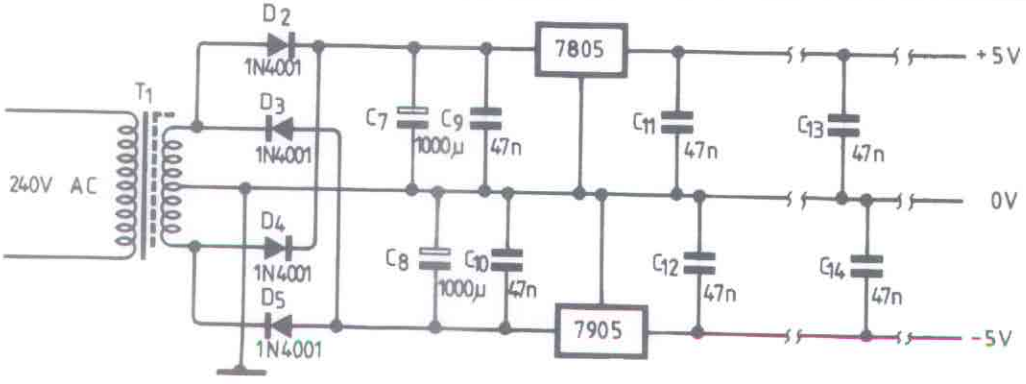

Power supply circuit. There is nothing special here.

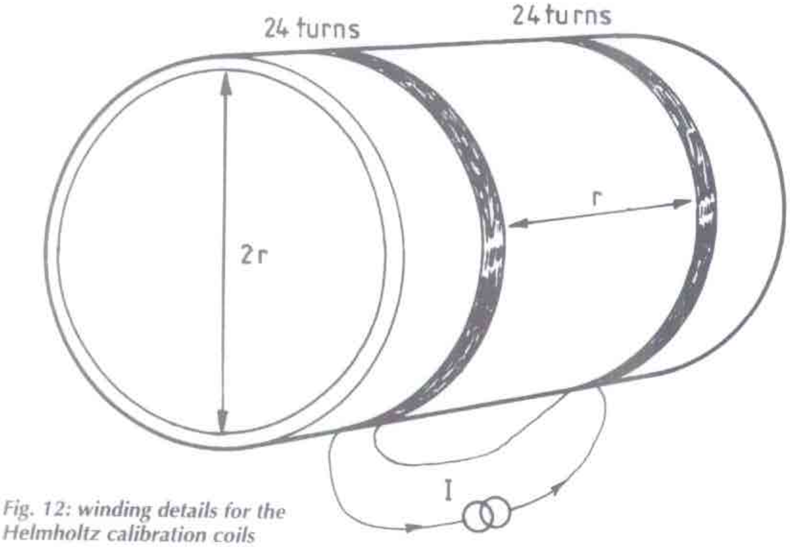

Fig. 12: winding details for the Helmholtz calibration coils

amplifier/filter of the same configuration also with a corner frequency of about 0.3Hz. This second stage has two alternative gains of x20 and x200 selectable by 4016 switch.

The non inverting input of the first stage amplifier is connected via a resistor to a potentiometer linked across positive and negative voltage divider chains to provide an adjustable input offset. The potentiometer is a stable cermet multi-turn type to allow the high resolution setting required at the highest sensitivity. (One tenth of a turn corresponds approximately to 500 gamma, the full range covering 100,000 gamma).

There is nothing particularly remarkable about the power supply.

Setting up

If this all appears to work, an oscilloscope should show a pickup coil signal similar to **Fig. 15**, variations depending on the individual winding symmetry. Amplitude changes should occur as the core is rotated in space. Similarly, a DC voltmeter connected to the test point at the output of the first stage should see a voltage which varies as the core is moved about. The trimpot used to set the first stage gain, should be set at maximum resistance and the multi-turn zero offset trimpot to the centre of its range before this check. If the first stage functions then the final second stage output is likely to be hard against the positive or negative amplifier limits, but very careful manipulation of the core orientation will find a position in which tiny movements will flick the output between limits. Even more careful adjustment may permit the output to settle somewhere between the amplifier limits.

Try to bring the output voltage to zero either by moving the core or adjusting the zero-offset trimpot. Shorting the gain change control line to ground will increase the second stage gain by a factor of ten and should reveal micropulsations in the shape of an output which fluctuates randomly by about 0.2V.

At this level of sensitivity metal objects in the vicinity should have a marked effect if they are moved. A mildly magnetised screwdriver may drive the system right off-scale from a foot away and a small magnet can be detected at six to eight feet. Even the car keys or a belt buckle may upset things if placed too close.

The second amplifier should perform in the same way, but the core will have to be rotated through about 90° to find the corresponding zero field position.

Calibration

Select one amplifier for calibration and connect a voltmeter to the test point at the first stage output. Place the sensor on a flat surface and rotate it slowly through 360°. The voltmeter should show a maximum (positive), a minimum (negative) and two zero crossings approximately at right angles to the maximum and minimum. Make a note of the values at maximum and minimum and if they are not of equal magnitude adjust the zero-offset trimpot so as to make them equal. This may take a few iterations to achieve a good balance, but should eventually make the zero crossings correspond to more or less zero field.

Next rotate the sensor to locate the maximum again and, while trying to maintain the heading, tilt it upwards to find the absolute maximum reading. In the UK this will be at about 67° to the horizontal, but it is not critical, as the maximum is quite broad and not very sensitive to angle. Compare this positive reading with the negative minimum found by rotating the sensor by 180° in the same 67° plane to the horizontal. The magnitudes of these two readings should be the same, if the zero-offset has been set correctly. This is not as difficult to do as it sounds, simply because of the very broad maxima and minima.

If the intention is to make serious measurements calibration with a Helmholtz coil will be required. The outlined design produces a field of 3.95 gauss/ampere. Strictly this implies a precision greater than is reasonable and should probably be read as 4.0 gauss/ampere or 400 gamma/mA (one gauss = 100 000 gamma).

The sensitivity sought at the test point is 20 000 gamma/volt: ±2.5V corresponds to a range of 100 000 gamma so the initial Helmholtz coil current setting should cover this. At 400 gamma/mA this calls for a current of 125mA variable. This should include a reversing switch to enable the current through the coils to be reversed easily.

Place the sensor in the centre of the Helmholtz coils with one pickup winding aligned to pick up maximum flux. Monitor the appropriate amplifier test point with a voltmeter or calibrated oscilloscope and rotate the Helmholtz coils and sensor to give zero volts. Switch on the coil current (set to 125mA) and the test point voltage should change by about two volts or so, positively or negatively. Using the amplifier gain trimpot, adjust so that the output changes by 5V when the coil current is reversed. (±2.5V range). Since the final stage gains are set by 1% tolerance fixed resistors, this completes the calibration, the output sensitivities being either 1000 gamma/volt or 100 gamma/volt.

Repeat the exercise to calibrate the second pickup winding and the instrument is ready for use. ■

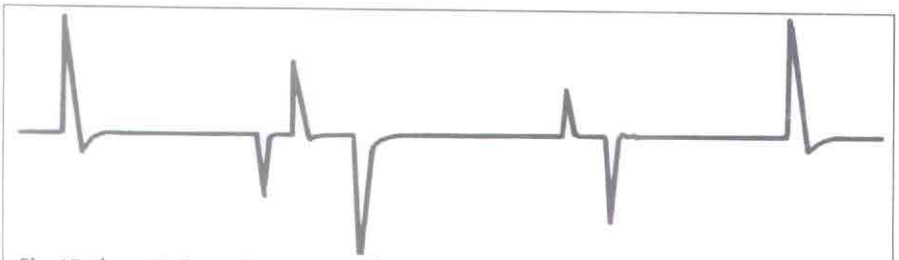

Fig. 15: the sort of waveform expected across the picup coils. The amplitude and polarity of the pulses changes with strength and direction of the static magnetic field.

The core used in this design is a Telcon Metals HCR alloy core type 7a and is available from Telcon Metals, phone 0293 528800