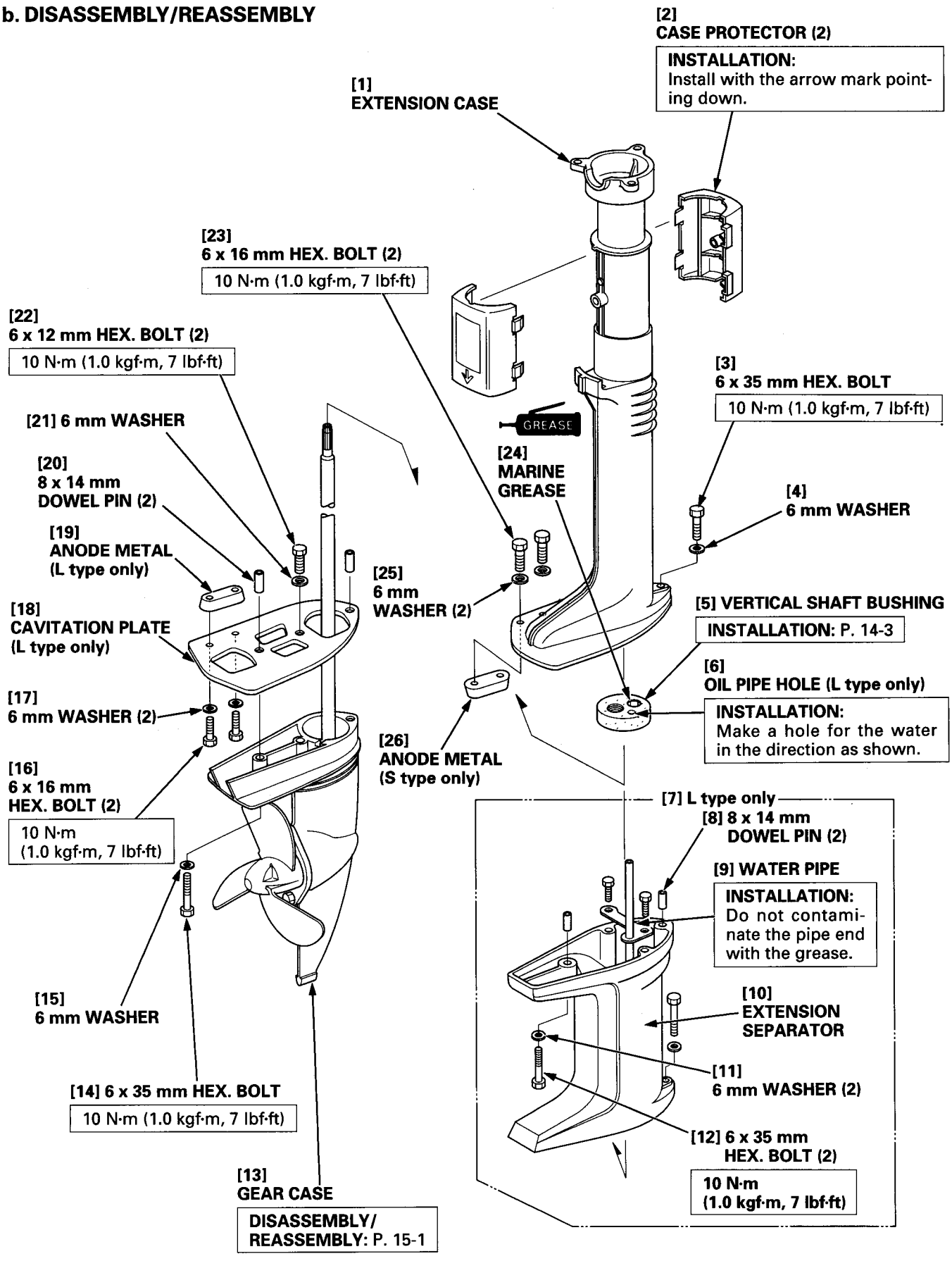b. DISASSEMBLY/REASSEMBLY